
CHILLVENTA
eSPECIAL
Refrigeration | AC & Ventilation | Heat Pumps
13.–15.10.2020
CONNECTING
EXPERTS.
NÜRNBERG MESSE

Ice slurry based energy storage in industrial cooling systems

Mathias Safarik, ILK Dresden

CONNECTING EXPERTS.

How does vacuum ice slurry work?

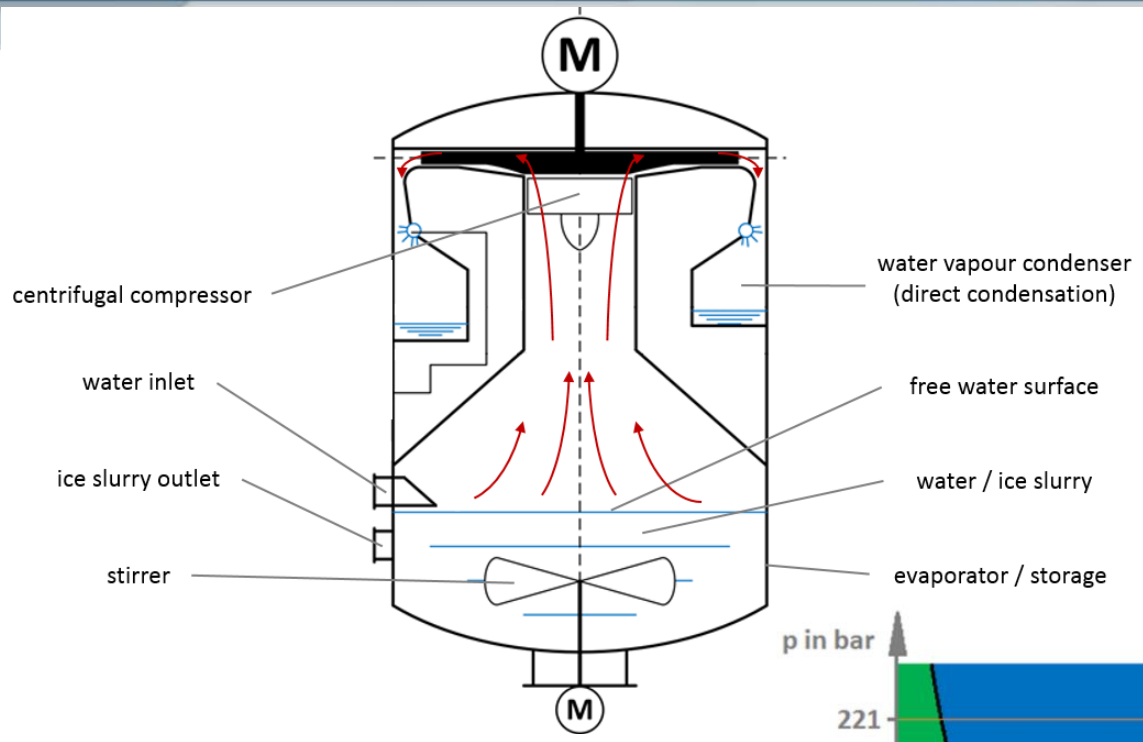

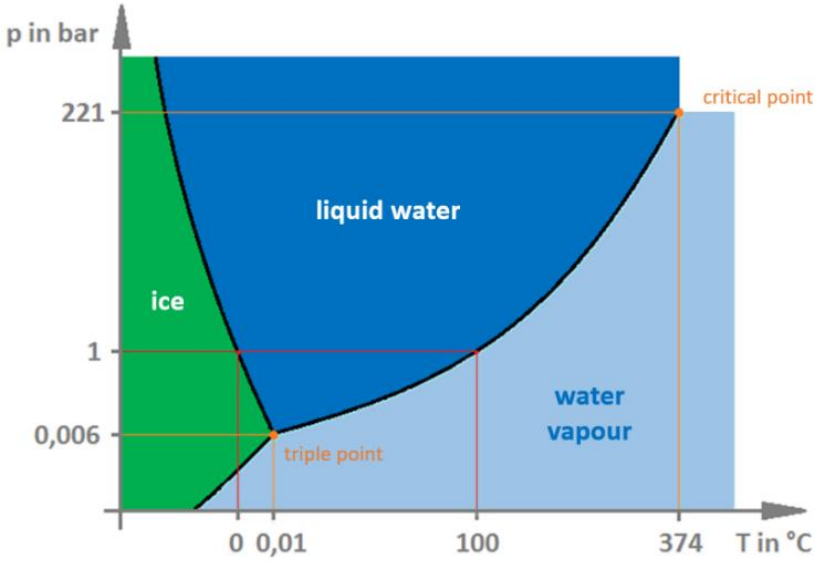

Heat of evaporation (6,1 mbar; 0,01 °C)

h_V = 2500 kJ/kg

Heat of fusion

h_{fus} = 333,5 kJ/kg

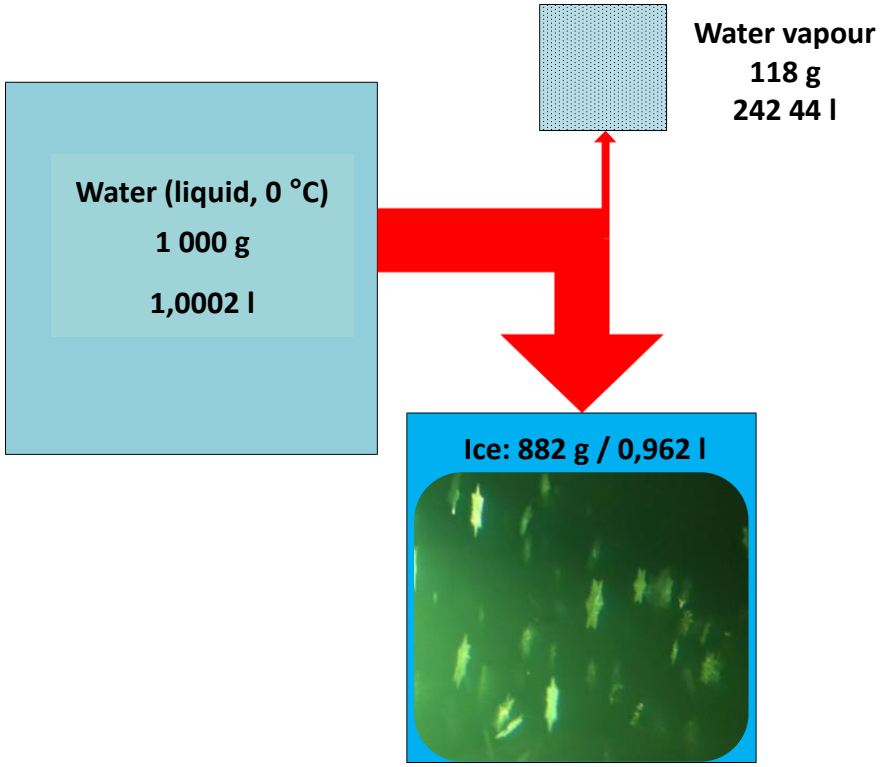

Comparison of cold storage technologies

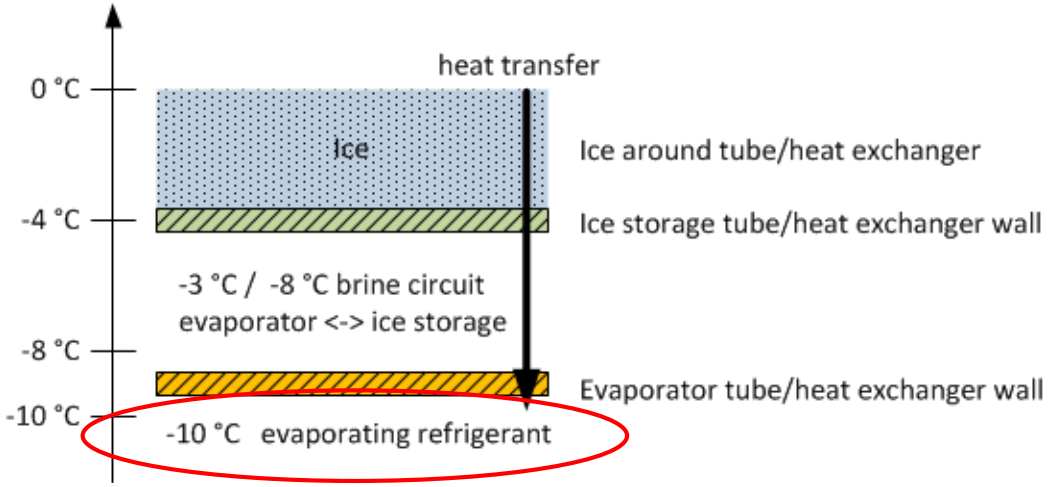

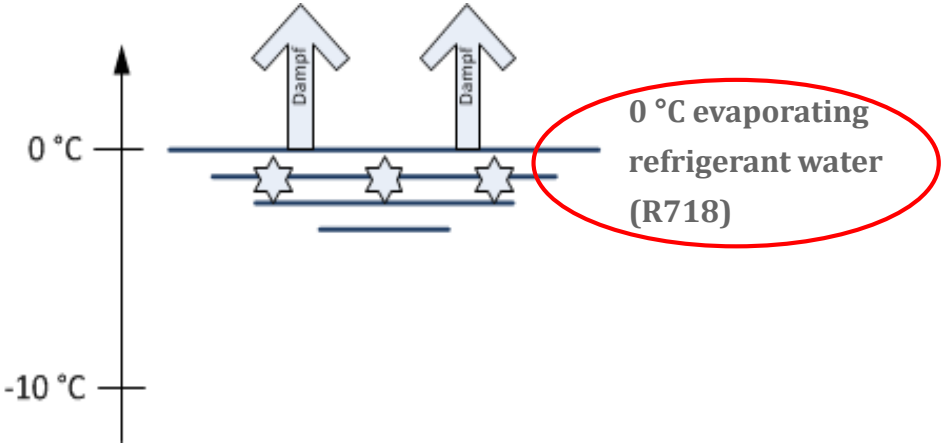

© Stuttgart University

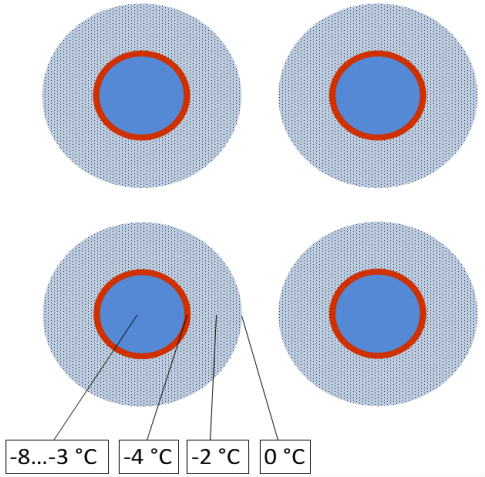

Advantages of vacuum ice slurry

- 7 times higher energy density than chilled water storage
- ~30 % higher efficiency than block ice storage
- Flexible operation; 0…100 % discharging
- Cheap storage medium (PCM)
- Pumpable storage medium
- Sustainable, using water (R718) as refrigerant

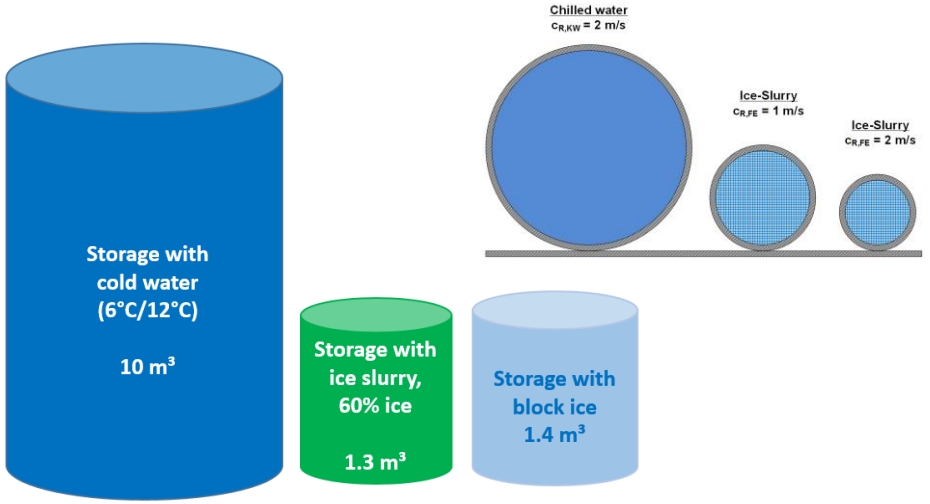

Comparison of storage volume for the same capacity

Storage with cold water		Storage with ice slurry		Storage with block ice
pumpable medium	+	pumpable medium		rigid medium
low energy storage density		high energy storage density	+	high energy storage density

Ice slurry storages combine the advantages of cold water and ice block

Integration of vacuum ice cold thermal energy storage in chilled water systems

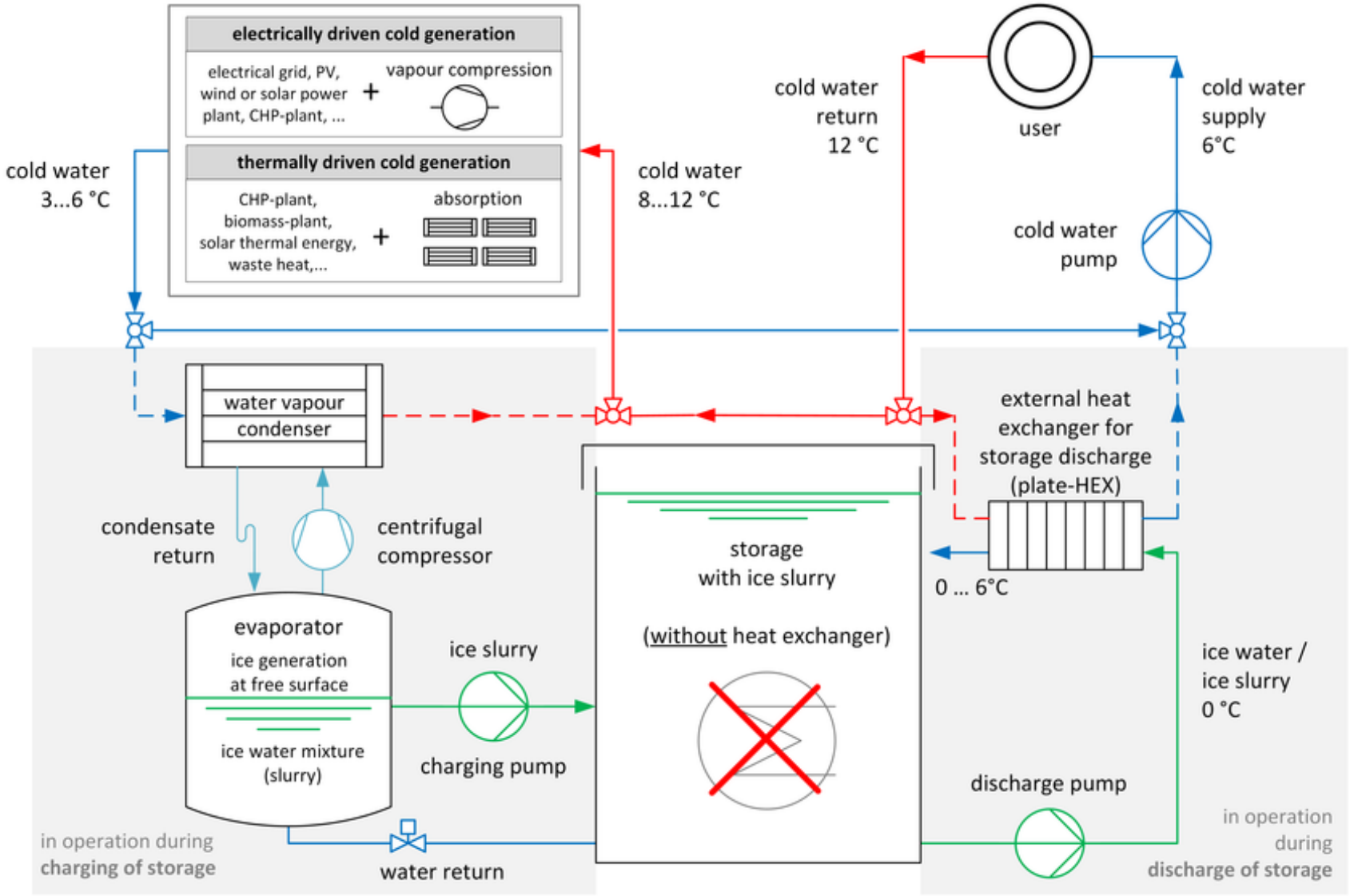

Vacuum ice slurry cold thermal energy storage - example

Göttingen, Germany

- Charging capacity: 180 kW
- Storage capacity: 1 MWh
- Discharging capacity: 300 kW
- Load management at local chilled water network

Vacuum ice slurry cold thermal energy storage - example

Data Center cold thermal energy storage
400 kW / 3.5 MWh / 1.200 kW

Ice slurry application in refrigerated warehouses

- Electricity or heat driven chilled water generation
- Ice slurry generation with low additional energy demand (small temperature lift)
- Cooling of refrigerated warehouse using ice slurry as coolant (thermal energy carrier) with constant temperature (0 °C or down to -5 °C with using additives)

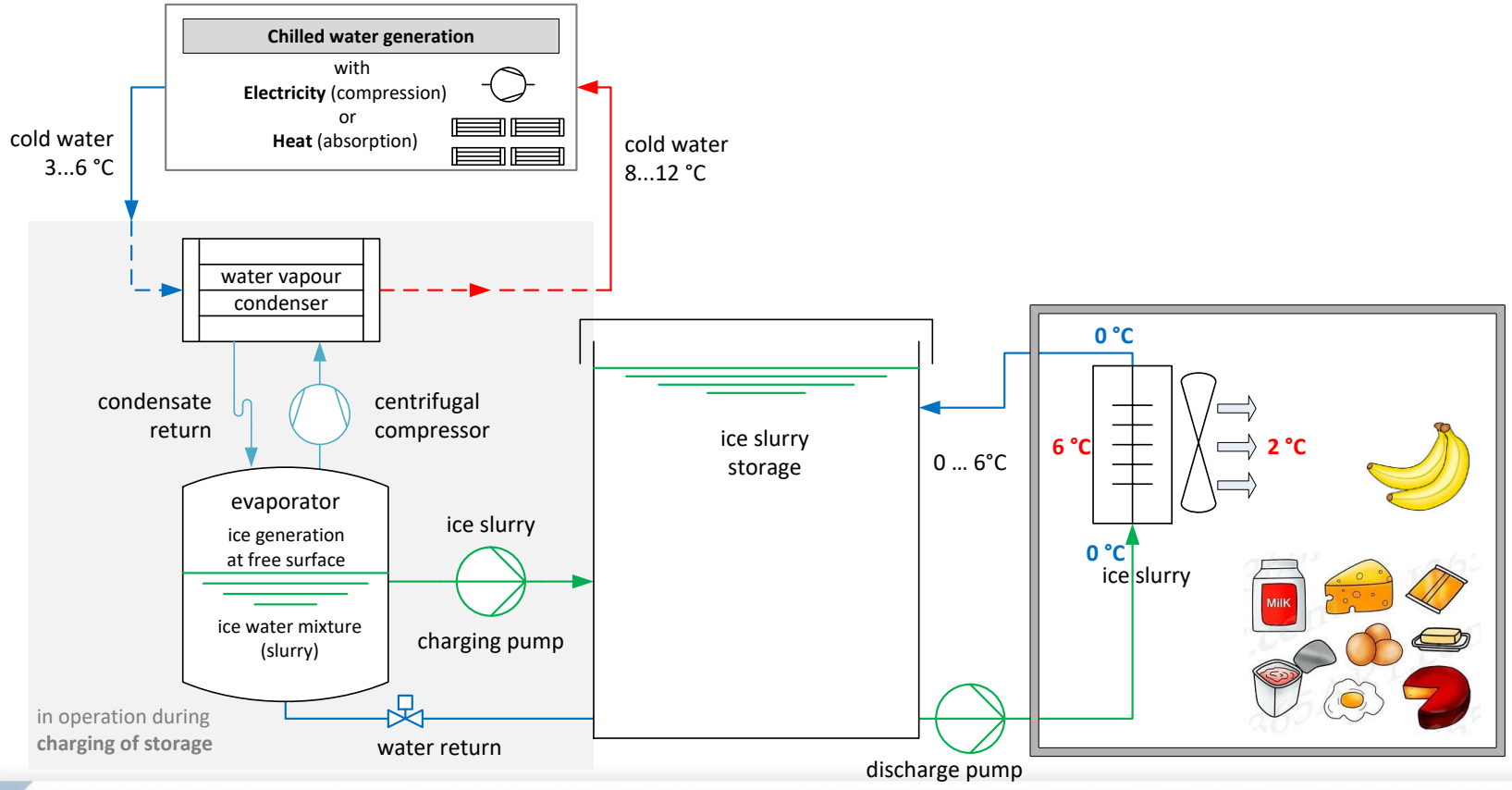

Combined Heating and Cooling with ice storage

- Cold for cooling of food or industrial processes (year round demand)

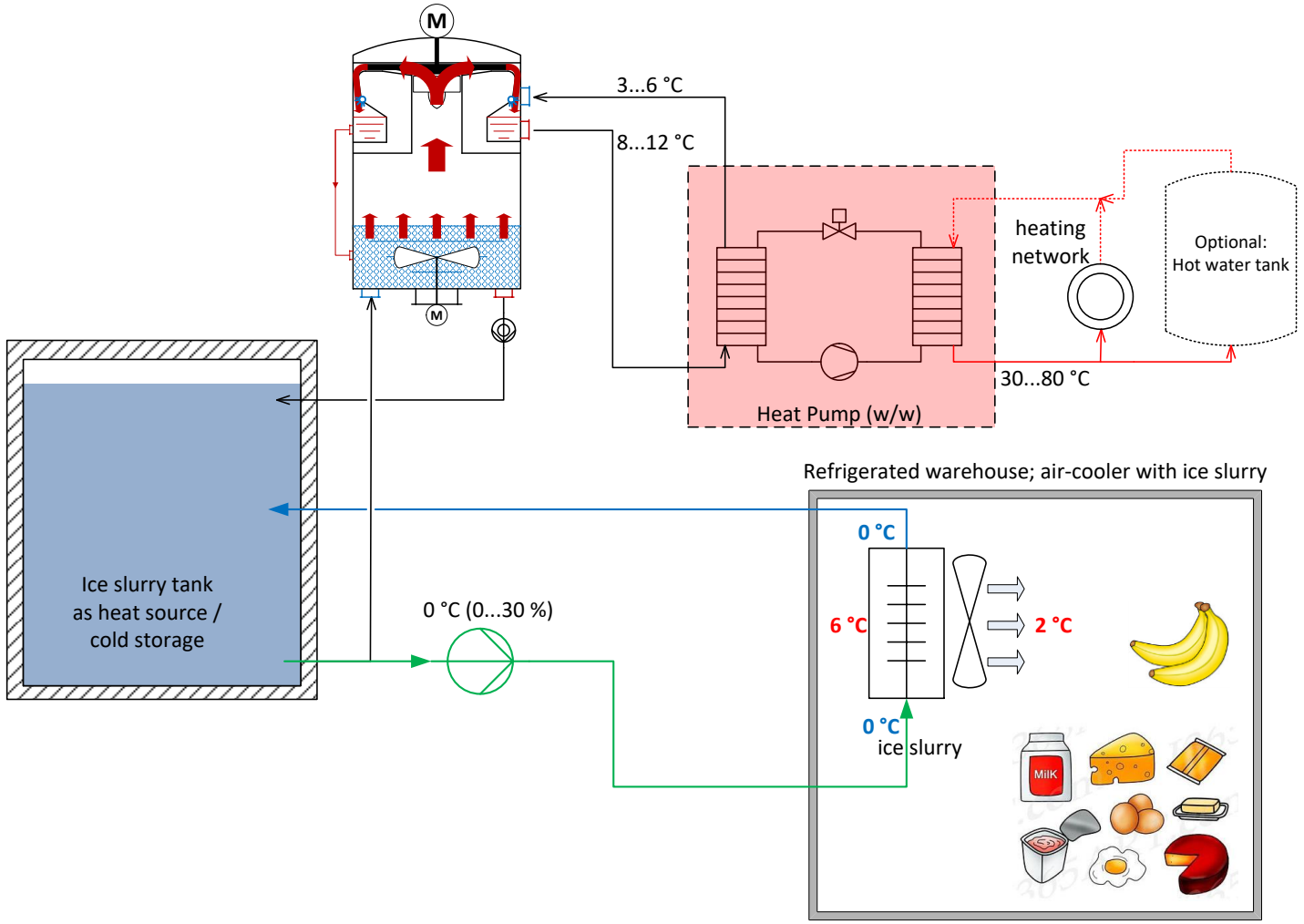

Ice slurry in Industrial Cooling Systems

Industrial refrigeration

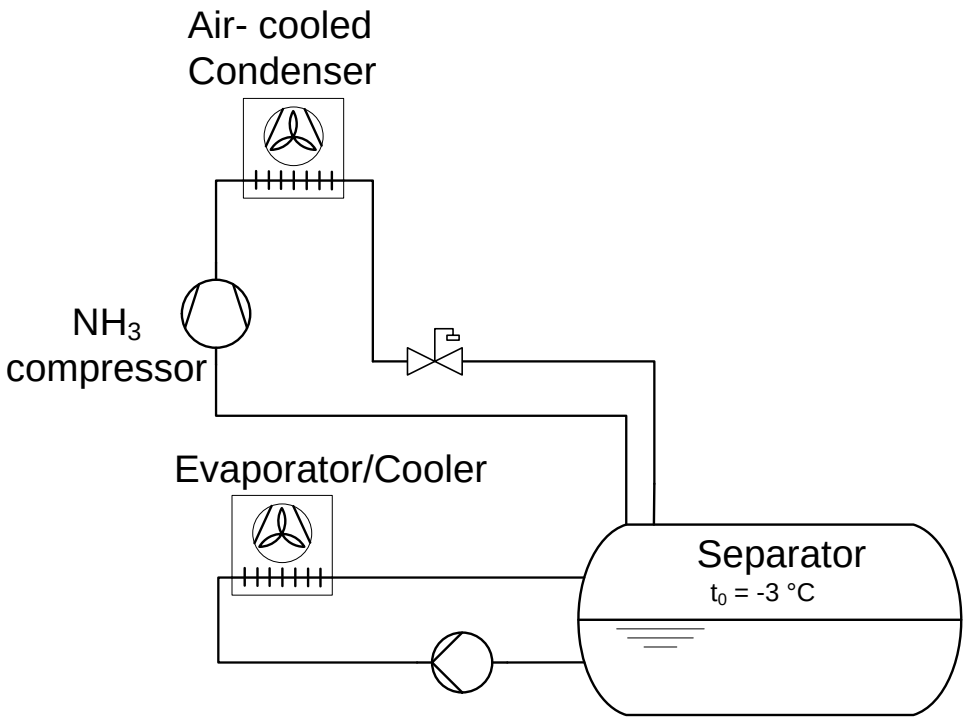

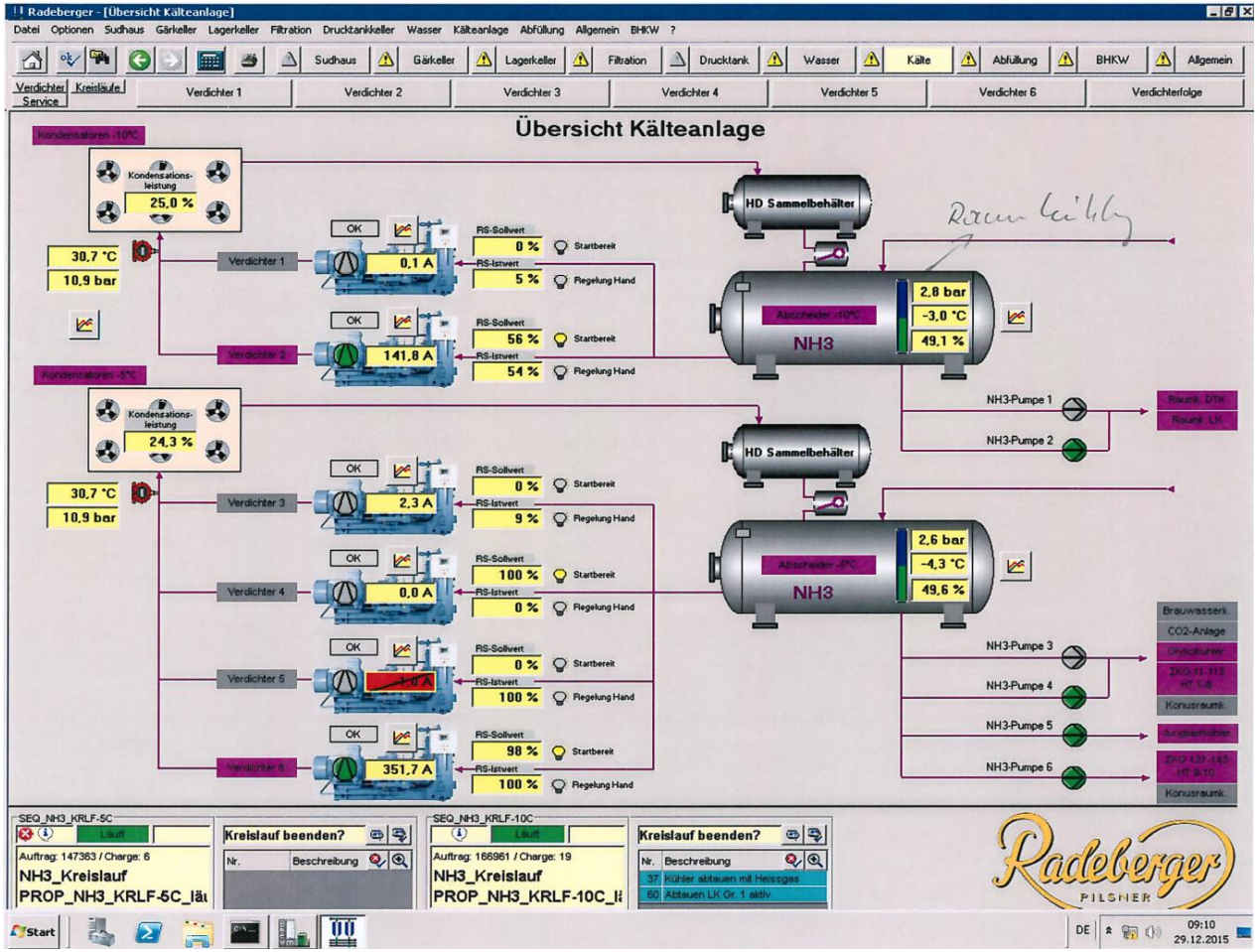

Ice slurry integration into industrial refrigeration systems

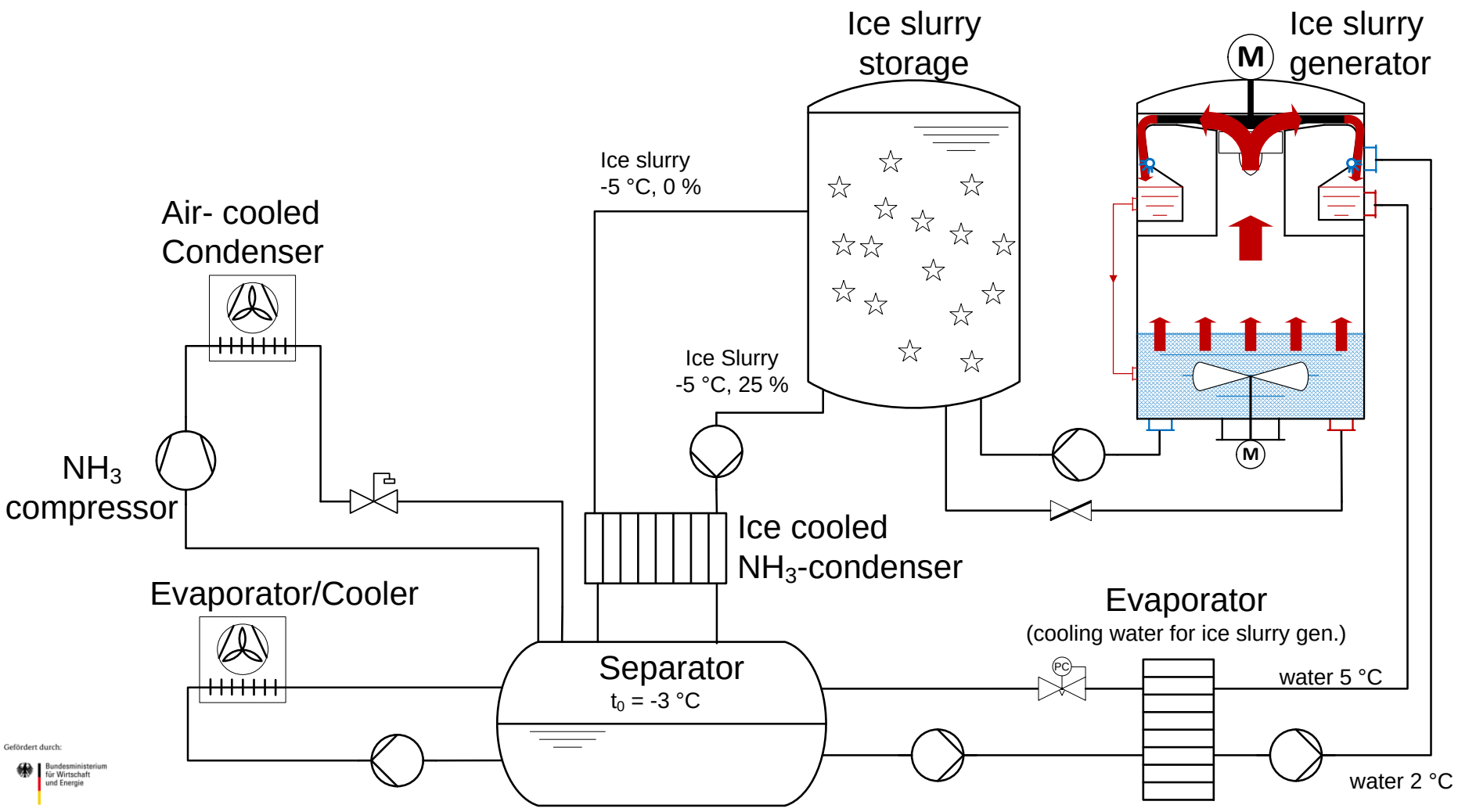

WINDNODE

SINTEG
SCHAUFENSTER INTELLIGENTE ENERGIE

Gefördert durch:
Bundesministerium für Wirtschaft und Energie
aufgrund eines Beschlusses des Deutschen Bundestages

Ice slurry integration into industrial refrigeration systems 2

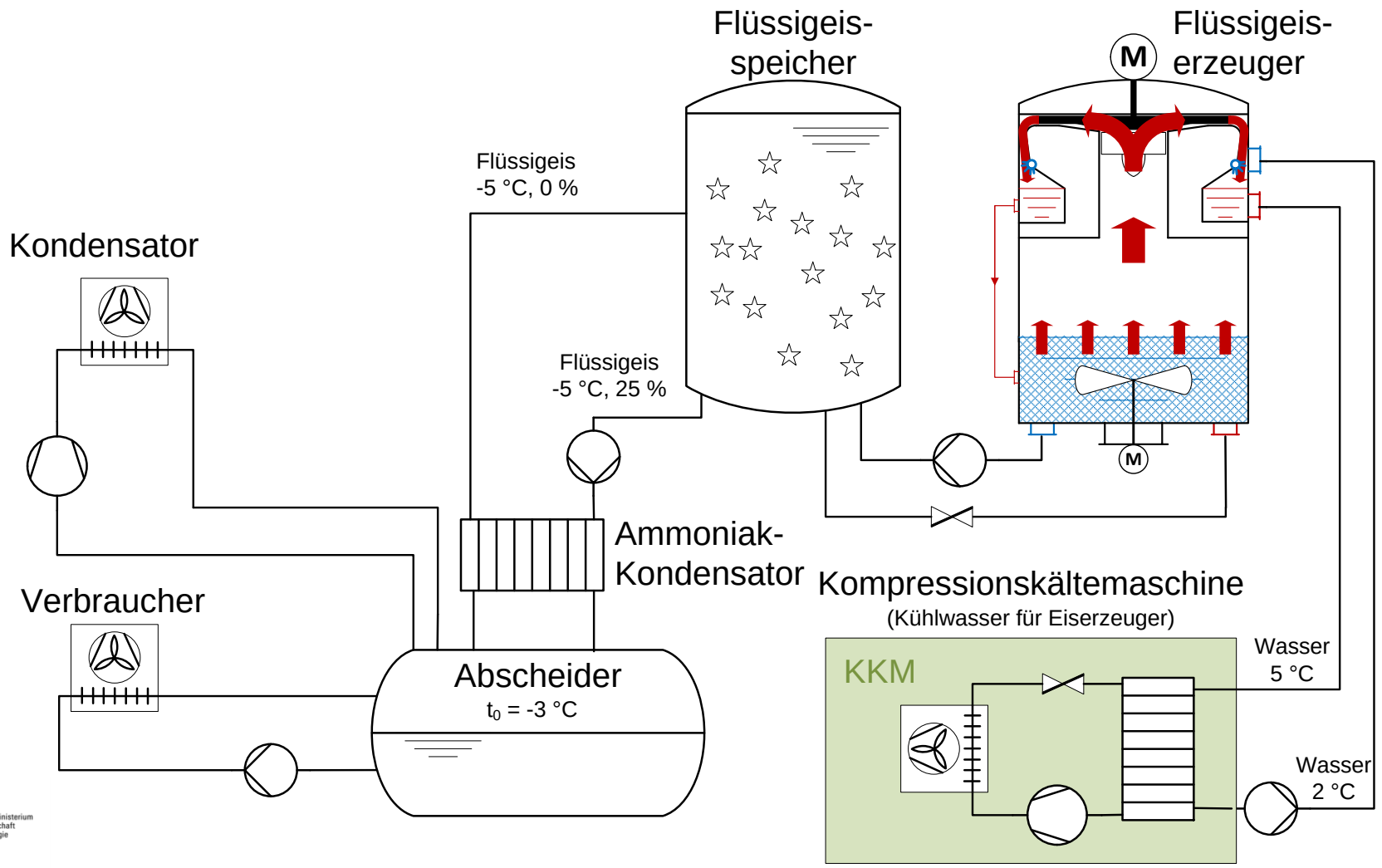

WINDNODE

SINTEG
SCHAUFENSTER INTELLIGENTE ENERGIE

Gefördert durch:
Bundesministerium für Wirtschaft und Energie
aufgrund eines Beschlusses des Deutschen Bundestages

Ice slurry integration into industrial refrigeration systems 3

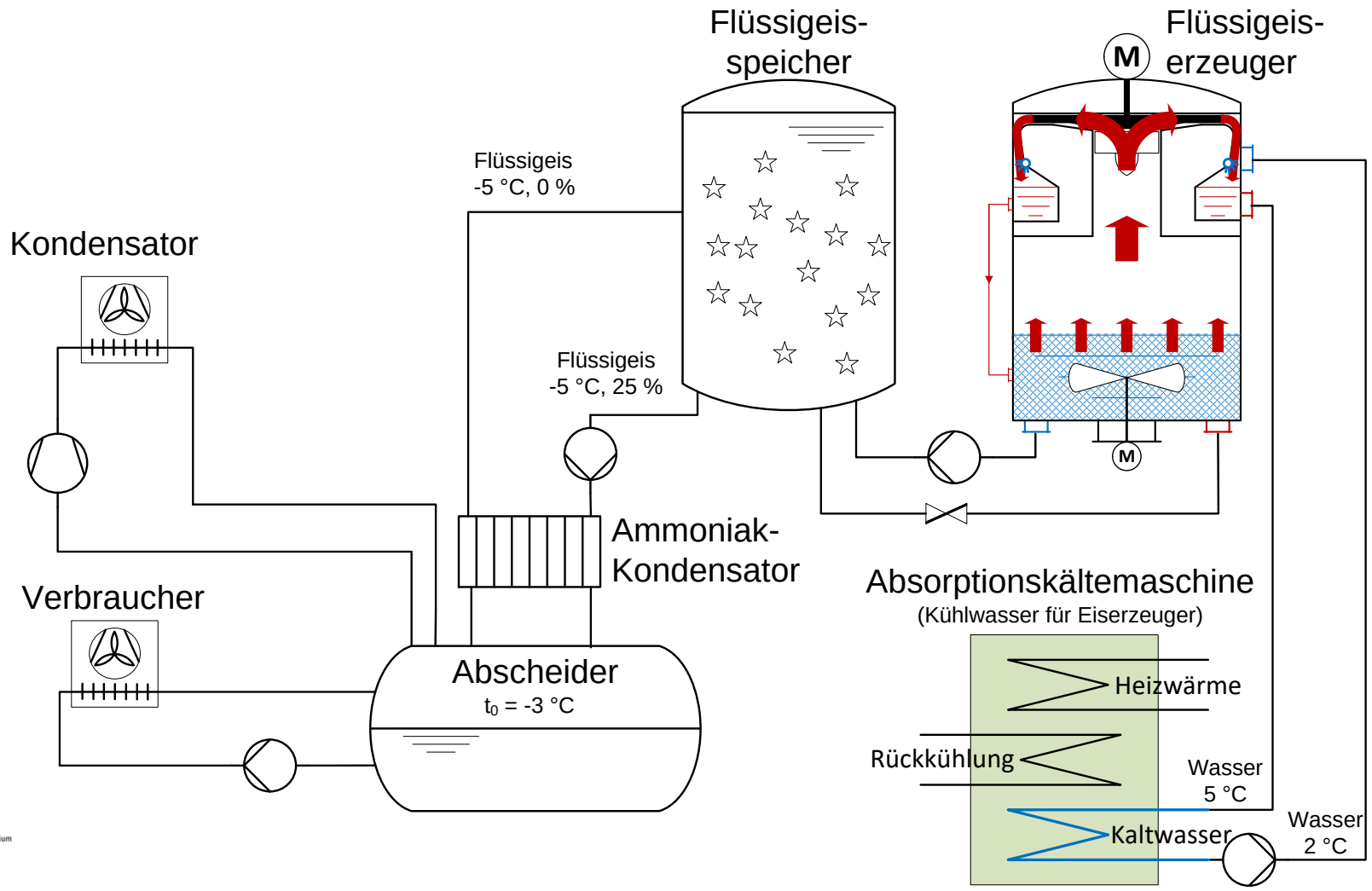

WINDNODE

SINTEG
SCHAUFENSTER INTELLIGENTE ENERGIE

Gefördert durch:
Bundesministerium für Wirtschaft und Energie
aufgrund eines Beschlusses des Deutschen Bundestages

Ice slurry integration into industrial refrigeration systems 4

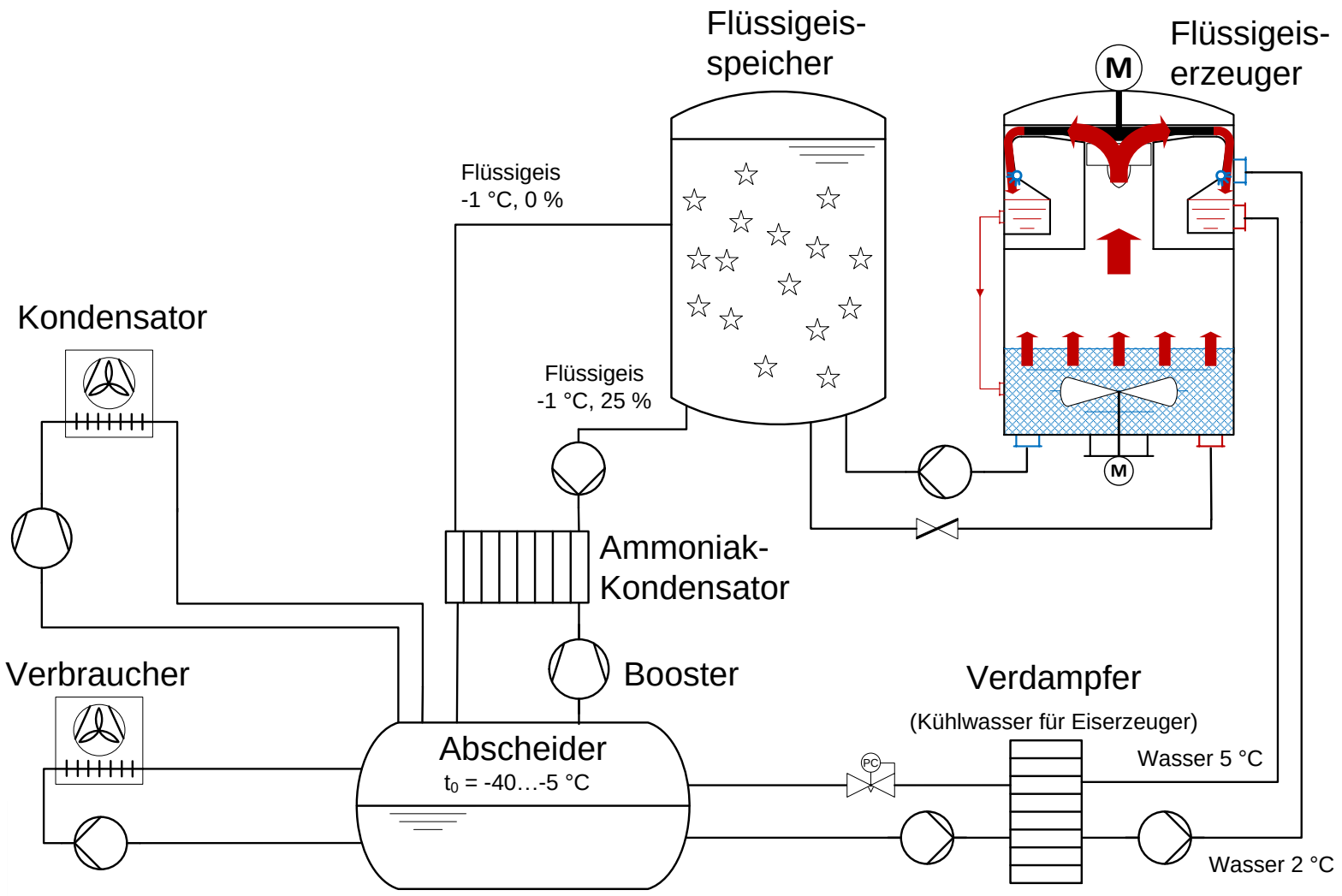

Vacuum ice slurry technology

- More information: www.ilkdresden.de/iceslurry
- Brochure: http://www.ilkdresden.de/fileadmin/user_upload/170130_Broschuere_Vakuumeis_eng_mail.pdf
- Email: ice@ilkdresden.de

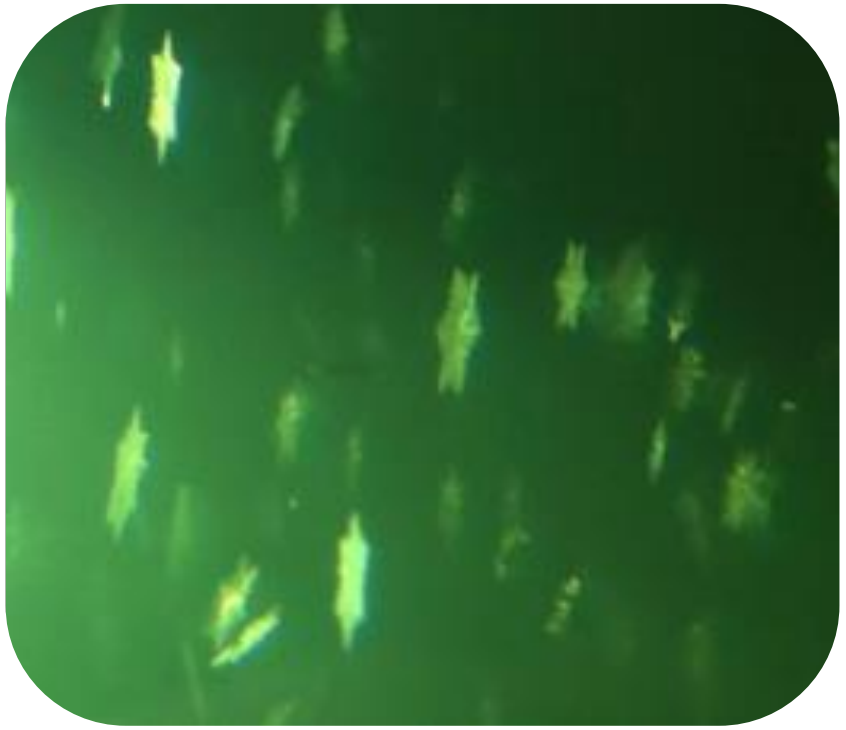

WINDNODE

SINTEG
SCHAUFENSTER INTELLIGENTE ENERGIE

Gefördert durch:
Bundesministerium für Wirtschaft und Energie
aufgrund eines Beschlusses des Deutschen Bundestages

Thank you for your attention.

CONNECTING EXPERTS.